PROPERTY DAMAGE, SEVERE INJURY AND/OR DEATH COULD RESULT FROM:

(1) FAILING TO FOLLOW THE INSTRUCTIONS CONTAINED IN THIS MAINTENANCE MANUAL;
OR
(2) REPAIRING, MODIFYING OR ALTERING ANY BARBER/SCT PRODUCT IN A MANNER THAT IS NOT INCLUDED IN THIS MAINTENANCE MANUAL.

IF YOUR SPECIFIC APPLICATION:

(1) REQUIRES A DEVIATION FROM THE INSTRUCTIONS CONTAINED IN THIS MAINTENANCE MANUAL;
(2) REQUIRES A REPAIR, MODIFICATION OR ALTERATION OF A BARBER/SCT PRODUCT THAT IS NOT INCLUDED IN THIS MAINTENANCE MANUAL;
OR
(3) RAISES ANY QUESTION ABOUT THE INSTRUCTIONS SPECIFIED IN THIS MAINTENANCE MANUAL,

PLEASE CONTACT YOUR BARBER/SCT REPRESENTATIVE FOR SPECIFIC INSTRUCTIONS REGARDING YOUR APPLICATION.

TO CONTACT YOUR BARBER/SCT REPRESENTATIVE:

PLEASE SEE THE “STANDARD CAR TRUCK COMPANY CONTACT INFORMATION” PAGE AT THE START OF THE FULL MANUAL.

Section 7

Frame Brace

7-A Inspection

- Frame Brace Component Diagram
- 70 Ton Universal Frame Brace Component Diagram
- Frame Brace Inspection
- Shear Pad Inspection
- Center Bonded Mounting Inspection

7-B Parts

- Frame Brace Assembly Identification
- Frame Brace Configurations
- Frame Brace Repair Kit
- Application Specific Frame Brace Components

7-C Repair

- Frame Brace Assembly Repair
- Frame Brace Upper and Lower Assemblies (“Pipes”)
- Retrofit Side Frame Mounting Brackets
- Shear Pad
- Integral Cast Side Frame Brackets
- Bottom Rod Safety Support Cables
- Bolt
- Double Tab Washer

If possible, please supply side frame or bolster AAR code number (9 digit) and casting pattern number, when ordering replacement components.

Frame Brace

Inspection

- Frame Brace Component Diagram
- 70 Ton Universal Frame Brace Component Diagram
- Frame Brace Inspection
- Shear Pad Inspection
- Center Bonded Mounting Inspection

Wabtec, Standard Car Truck
6400 Shafer Court – Ste 450, Rosemont, Illinois 60018, U.S.A.
Phone (847) 692-6050 Email: SCTTechCustomerService@Wabtec.com

Always Use Original
Barber Parts

Frame Brace Component Diagram

Item	Description	Part No.	Qty. Per Truck
1	Upper Brace	10206	1
2	Lower Brace	10207	1
3	Bolt, Center Clamp	5634-2	2
4	Washer, Center Clamp	5559	4
5	Nut, Center Clamp	5644	2
6	Center Bonded Mounting	5584	8
7	Holding Ring	42-7100-001	8
8	Locking Plate	42-7100-003	4
9	Double Tab Washer	42-7100-187	4
10	Bolt, End Block	5628-3	4
11	Shear Pad	application specific	4
12	Bottom Rod Safety Support Cable	10183	4
13	Channel Mounting Bracket R/H	application specific	2
14	Channel Mounting Bracket L/H	application specific	2
15	Base Plate R/H	application specific	2
16	Base Plate L/H	application specific	2
17	Support Plate	application specific	4
18	Side Frame Key	10192	4

Item 11 can be replaced by a pedestal roof shim with a ¼ pedestal roof wear liner in applications where shear pads are not required.

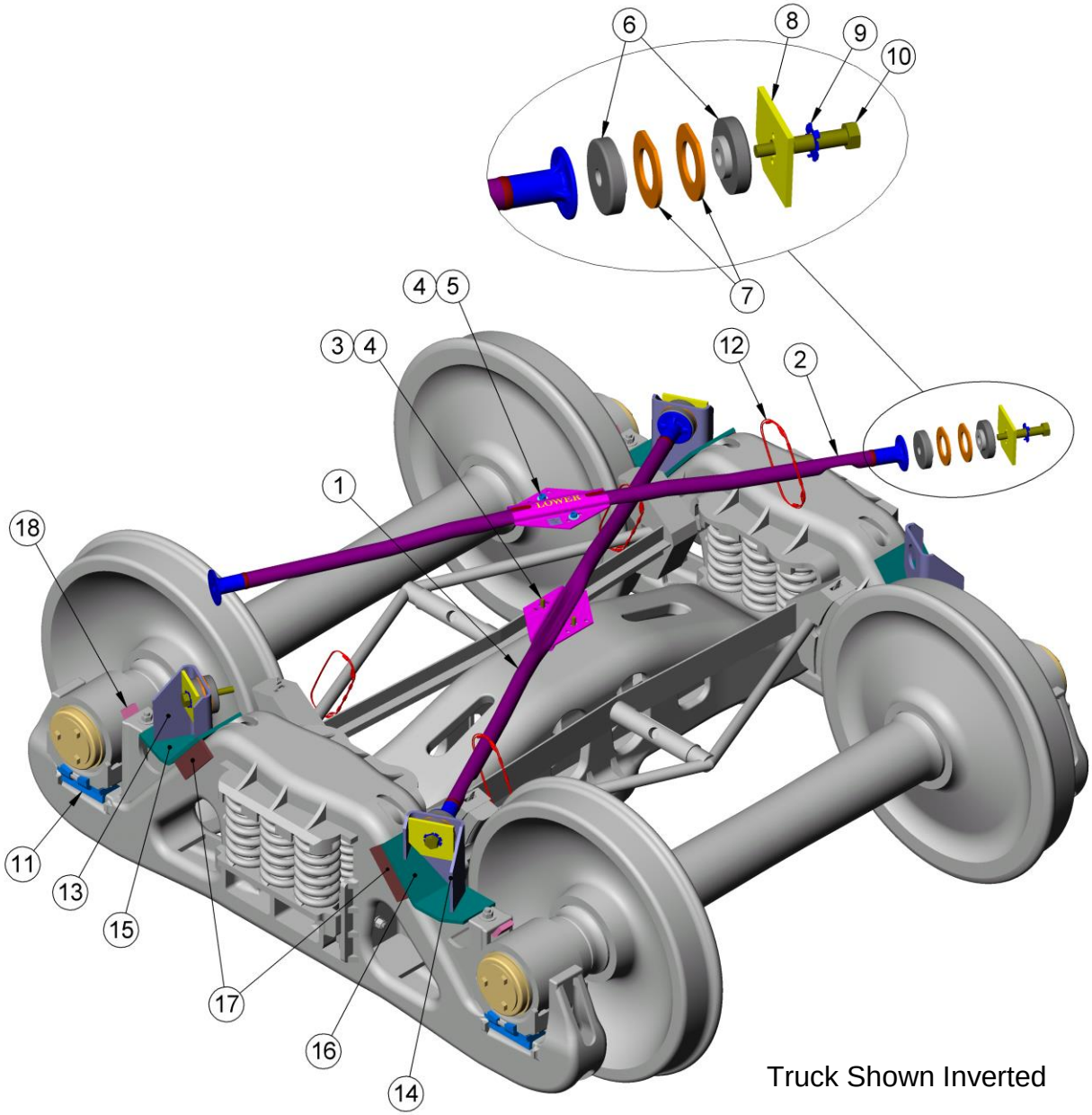

Truck Shown Inverted

70 Ton Universal Frame Brace Component Diagram

Item	Description	Part No.	Qty. Per Truck
1	Channel Mounting Bracket R/H	10391-001	2
2	Channel Mounting Bracket L/H	10391-002	2
3	Bolt, End Block	5628-3	4
4	Double Tab Washer	42-7100-187	4
5	Locking Plate	42-7100-003	4
6	Center Bonded Mounting	10438	8
7	Upper Brace	10439	1
8	Lower Brace	10440	1
9	Bottom Rod Safety Support Cable	10183	4
10	Base Plate R/H	10392-001	2
11	Base Plate L/H	10392-002	2
12	Support Plate R/H	10393-001	2
13	Support Plate L/H	10393-002	2
14	Holding Ring	42-7100-001	8
15	Bolt, Center Clamp	5634-2	2
16	Nut, Center Clamp	5644	2
17	Washer, Center Clamp	5559	4

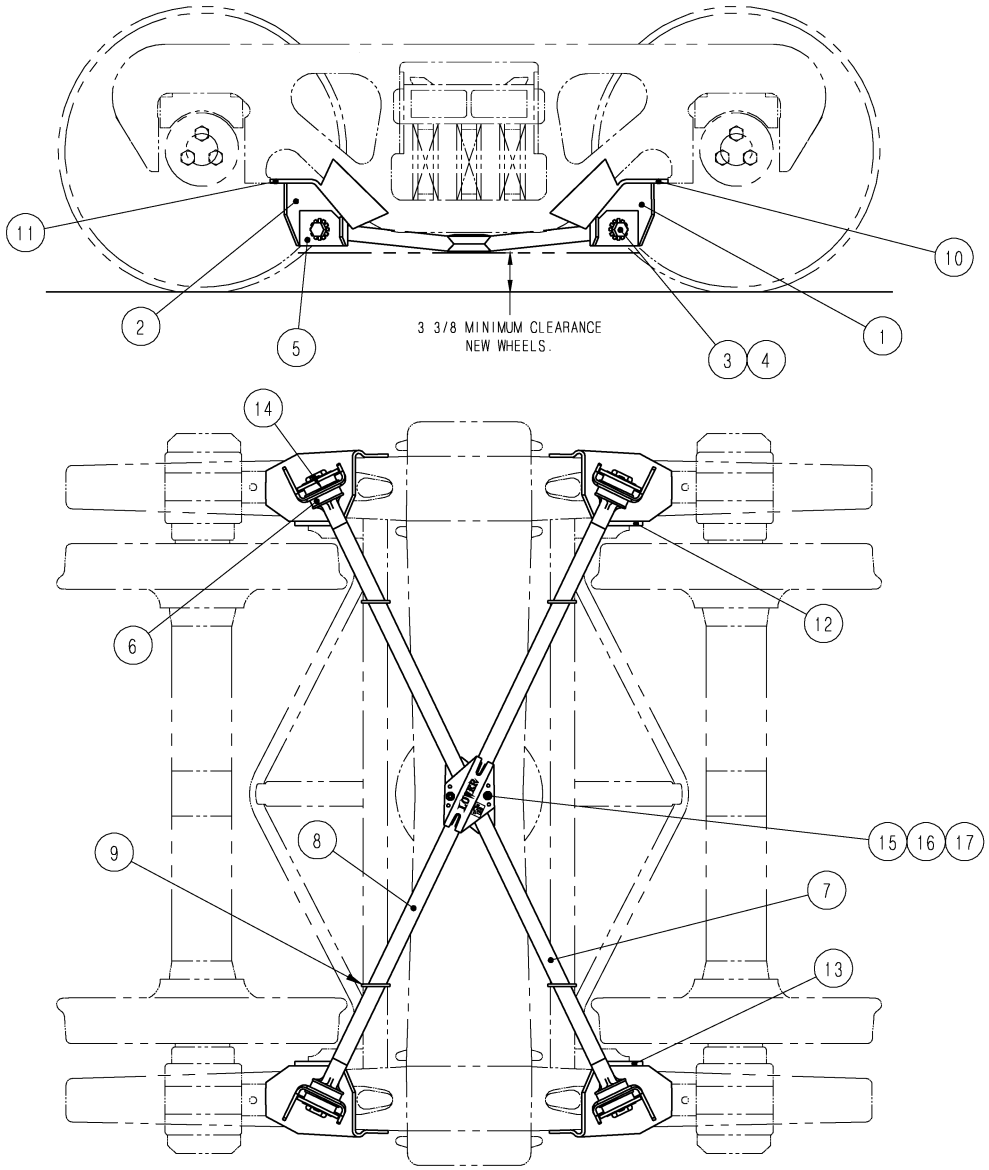

Frame Brace Inspection

During inspection of loaded or empty equipment, the car shall be "bad ordered" for the necessary corrective repair if any of the following conditions are found.

1. Missing end bolts that fasten the Frame Brace upper and lower assemblies ("pipes") to the brackets located on the side frame tension member.
2. Double tab washer disengaged in locking plate, broken or missing washer between the bolt head and locking plate, or less than 1 tab on bolt head.
3. Missing shear pad ground cables. Each truck must have a minimum of two ground cables intact.
4. Missing shear pad or steel shim between roller bearing adapter and side frame pedestal.
5. Examine the Frame Brace assemblies ("pipes") for any evidence of the following:
   - Broken center clamp connection or Frame Brace upper and lower assemblies ("pipes").
   - Bends or distortion from the original shape, at the mid-point between the center clamp and end flange. (See Figure 1)
   - Evidence of rubbing or interference between the brace assembly and the brake equipment.
   - Gouges in the brace pipe material in excess of 1/8" deep.
   - Distance between the top of rail and bottom of the brace center clamp is 2 ¾" or less.
   - Cracks in the end flange weld
6. Examine the side frame mounting brackets for any evidence of the following:
   - Missing, broken, bent, or damaged side frame-mounting brackets. Superficial scratches are permissible. A welding fixture may be required to determine if damage has occurred.
   - Deep gouges, cuts or obvious bending of the side frame-mounting brackets.
   - Cracks in the welds or bracket parent material. **Note: Cracked side frames should be repaired or replaced in accordance with AAR Specification M-214.**
7. Verify the stack height of the center bonded mountings. Stack height should be 2 ¾" or less when the end bolt is fully torqued. (See Figure 2)
8. Missing or broken Bottom Rod Safety Support cables looped around the upper and lower braces and the brake beams in four places. Brake beam must operate freely allowing for worn wheel and brake shoe conditions.
9. Verify the dimension between the thrust lug and bearing adapter. When shear pads are used this dimension should be 1/4" to 3/8" combined.

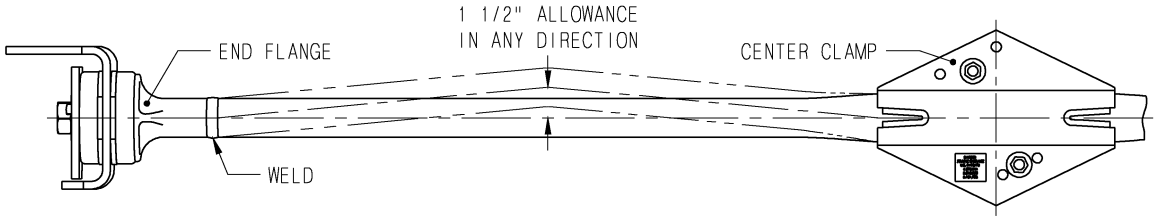

Figure 1

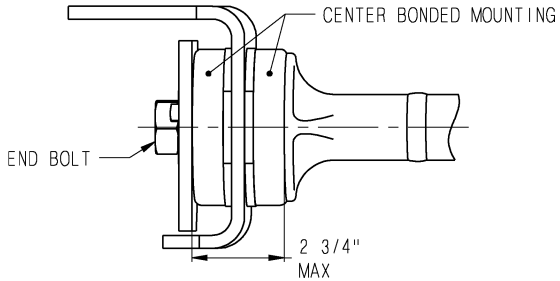

Figure 2

Shear Pad Inspection

Shear pads should be inspected each time the car is “shopped” or at least every 18 months. Minor abrasion commonly occurs on the top or bottom pad surfaces and the retaining lugs due to contact with the adapter or side frame. This type of abrasion will not affect function or service life providing the breaks appear between the elastomer and the plates and do not exceed # 3 condition.

- Shear Pad may be positioned with the grounding strap facing outboard or 180° facing inboard.
- Two grounding cables minimum per truck are required.
- Grounding cable may be coated or covered with a plastic sleeve.

Replacement is required if any of the following conditions are found.

1. Evidence of excessive (greater than 1”) elastomer extrusion, bulging or swelling past the metal parts, or tackiness.
2. Deep cracks in the elastomer material. Each break, not the sum of all breaks, should not exceed 3/8” in depth and 3” in length or an area of 1 ¼ sq. in. (See Figure 1). Under no conditions should the crack greater than 1” deep be allowed.

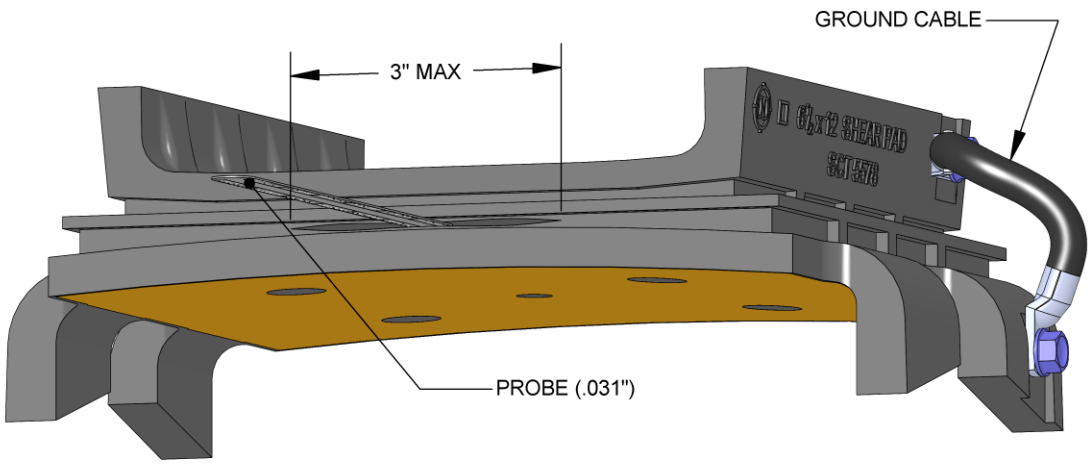

Figure 1

Continued next page

Shear Pad Inspection

3. Delamination of the bond between metal plates and the elastomer main body exceeding 1” in depth and 3” in length, or a total of 3 sq. in. (See Figure 2).
4. Missing metal plates.

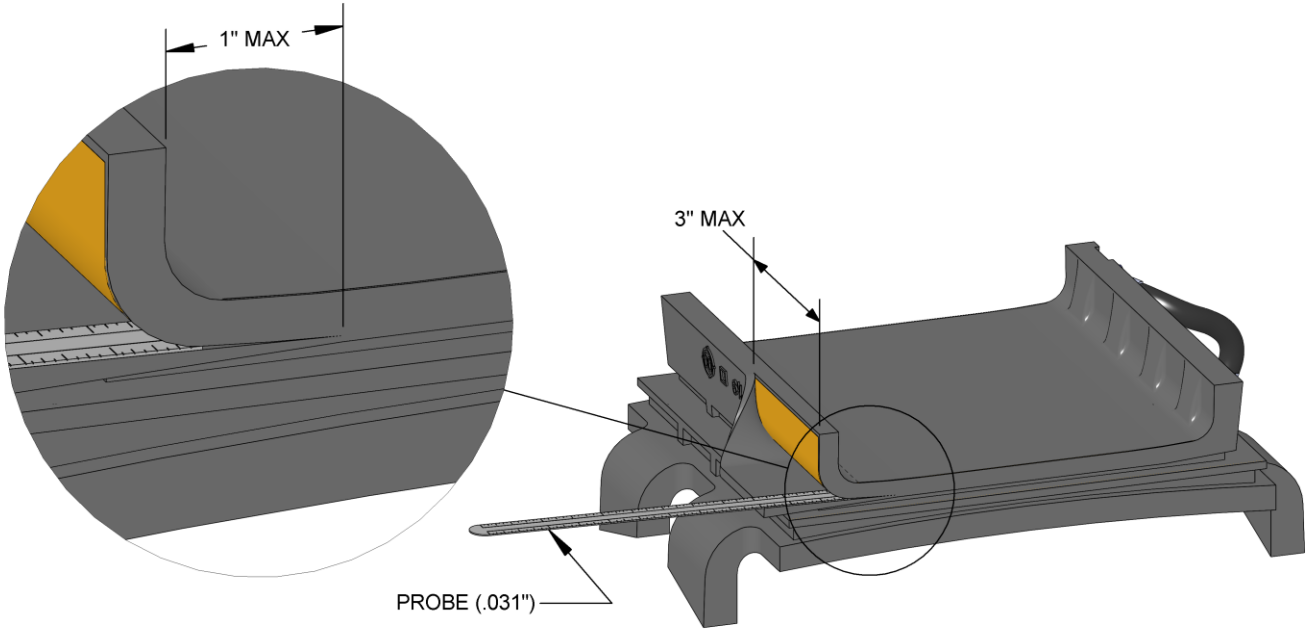

Figure 2

Wabtec, Standard Car Truck
6400 Shafer Court – Ste 450, Rosemont, Illinois 60018, U.S.A.
Phone (847) 692-6050 Email: SCTTechCustomerService@Wabtec.com

Always Use Original
Barber Parts

Center Bonded Mounting Inspection

Center bonded mountings should be inspected each time the frame brace assembly is removed from the truck assembly. Replacement is required if any of the following conditions are found.

1. Cracks, splits, or delamination of the bond between the metal plates and the elastomer body.
2. Measure the height of the Center Bonded Mounting just prior to re-installation. The height must be .84” or greater to be acceptable for re-use (see figure 1). Allow 24 hours for relaxation.

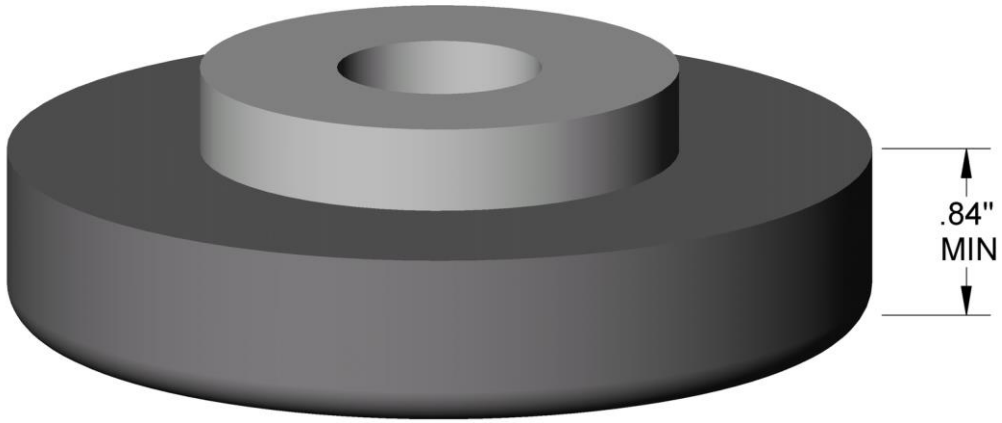

Figure 1

Wabtec, Standard Car Truck
6400 Shafer Court – Ste 450, Rosemont, Illinois 60018, U.S.A.
Phone (847) 692-6050 Email: SCTTechCustomerService@Wabtec.com

Always Use Original
Barber Parts

Frame Brace

Parts

- Frame Brace Assembly Identification
- Frame Brace Configurations
- Frame Brace Repair Kit
- Application Specific Frame Brace Components

Wabtec, Standard Car Truck
6400 Shafer Court – Ste 450, Rosemont, Illinois 60018, U.S.A.
Phone (847) 692-6050 Email: SCTTechCustomerService@Wabtec.com

Always Use Original
Barber Parts

Frame Brace Parts

Frame Brace Assembly Identification

The Channel Mounting Bracket, Base Plate, Support Plate and in some cases the Upper and Lower Brace are application specific parts, designed to fit a particular side frame pattern. In order to identify the particular Frame Brace assembly it is cross-referenced according to the manufacturer's pattern number. The pattern number is normally located on the outboard side above the lightener opening on the left. The AAR side frame marking diagram can be found in section 1. Please have the pattern number available when contacting Standard Car Truck regarding Frame Brace.

Frame Brace Configurations

Frame Brace is available in the following configurations:

- Retrofit (as illustrated in component diagram) is a completely welded design in which the Channel Mounting Bracket, Base Plate and Support Plate are installed by welding onto AAR narrow pedestal side frames.
- Integral cast pad utilizes a special side frame in which a pad is incorporated into the tension member to accept a Channel Mounting Bracket that is welded directly to the side frame. This design does not use a Base Plate or Support Plate.
- Integral cast channel utilizes a special side frame in which all the frame brace bracket components with exception of the holding ring have been incorporated into the side frame tension member.

Frame Brace Repair Kit

The repair kit includes the parts necessary to replace the Frame Brace assemblies ("pipes") and standard hardware on a frame braced truck (See typical parts list below). Not supplied are the ½" bolts, washers and nuts to fasten together the upper and lower center clamps.

SK-1657 Repair Kit		
Description	Qty	Part No.
1"-8 x 5.5" lg. Hex Bolt, Grade 8, Class 2A Threads	4	5628-3
Double Tab Washer	4	42-7100-187
Locking Plate	4	42-7100-003
Center Bonded Mounting	8	5584
Frame Brace Upper, 30° Dimple	1	10206
Frame Brace Lower, 30° Dimple	1	10207
Bottom Rod Safety Support	4	10183
Frame Brace Repair Kit Instructions, 30° Dimple Braces	1	SK-1666

SK-1794 70 Ton Universal Repair Kit		
Description	Qty	Part No.
1"-8 x 5.5" lg. Hex Bolt, Grade 8, Class 2A Threads	4	5628-3
Double Tab Washer	4	42-7100-187
Locking Plate	4	42-7100-003
Center Bonded Mounting	8	10438
Frame Brace Upper, 30° Dimple	1	10439
Frame Brace Lower, 30° Dimple	1	10440
Bottom Rod Safety Support	4	10183
Frame Brace Repair Kit Instructions, 70 Ton Universal	1	SK-1785

Application Specific Frame Brace Components

Contact Standard Car Truck Company for ordering the following application specific Frame Brace components:

- Channel Mounting Bracket
- Base Plate
- Support Plate
- Holding Rings (Integral cast channel side frames)

Frame Brace

Repair

- Frame Brace Assembly Repair
- Frame Brace Upper and Lower Assemblies (“Pipes”)
- Retrofit Side Frame Mounting Brackets
- Shear Pad
- Integral Cast side Frame Brackets
- Bottom Rod Safety Support Cables
- Bolt
- Double Tab Washer

Wabtec, Standard Car Truck
6400 Shafer Court – Ste 450, Rosemont, Illinois 60018, U.S.A.
Phone (847) 692-6050 Email: SCTTechCustomerService@Wabtec.com

Always Use Original
Barber Parts

Frame Brace Repair

Frame Brace Assembly Repair

- Missing or damaged components that affix the Upper and Lower Braces to the mounting brackets can be replaced in kind. Refer to the Frame Brace Installation or Repair Kit Instructions for the appropriate assembly methods.
- Tighten the bolts to a torque of 600 ft-lbs. while holding the end of the brace with a pipe wrench. When the specified torque is reached, bend at least two previously unbent tabs of the Double Tab Washer against the bolt head flats. Failure to use a pipe wrench may result in inadequate torque.

Frame Brace Upper and Lower Assemblies (“Pipes”)

- Damaged or broken brace assemblies can not be repaired. Replace only. Frame Brace upper and lower assemblies (“pipes”) must be replaced as a set.

Retrofit Side Frame Mounting Brackets

- Damaged or broken side frame mounting brackets can not be repaired. Replace only. Replacement of the mounting brackets requires use of an “installation (welding) fixture”. Refer to the Frame Brace Application Procedure (SK-####) for the appropriate assembly and welding methods. **Contact Standard Car Truck Company for additional technical assistance.**

Shear Pad

- No repair allowed. Replace only. The replacement of broken or missing ground cables is permitted.

Integral Cast Side Frame Brackets

- In some cases the mounting bracket portion of the integral cast side frame can be repaired providing the remainder of the frame can be repaired in accordance with AAR Specification M-214. **Contact Standard Car Truck Company for additional technical assistance.**

Bottom Rod Safety Support Cables

- Replace broken or missing cables. 4 required per truck. Allow adequate slack for unimpeded movement of the brake beam.

Bolt

- Do not reuse.
- Lubricate during assembly.

Double Tab Washer

- Reuse possible with unbent tabs only.